SDSA.P PART LIST		
ITEM	QTY	PART NUMBER
1	1	SDSA.P.1
2	1	SDSA.P.2
3	1	SDSA.P.3
4	1	SDSA.P.4
5	1	SDSA.P.5
6	1	SDSA.P.6
7	1	SDSA.P.7
8	1	SDSA.P.8
9	1	SDSA.P.9
10	1	SDSA.P.10
11	1	SDSA.P.11

PASSENGER STEERING ARM (SDSA.P)

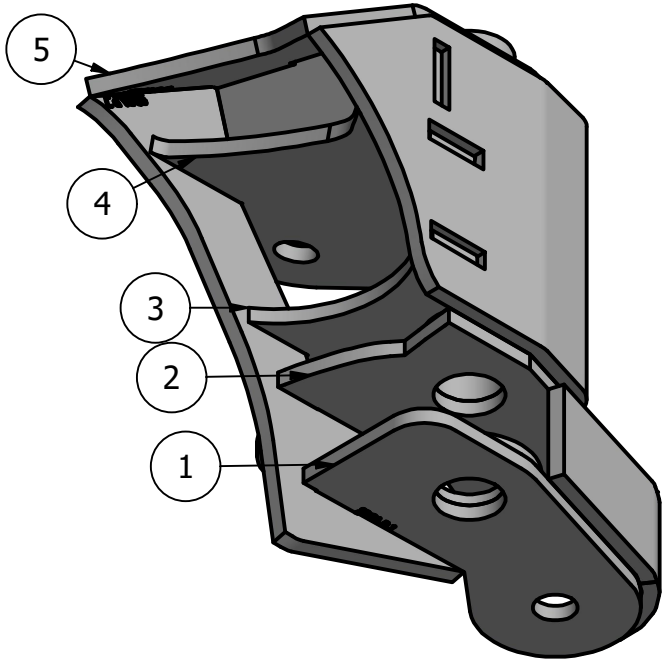

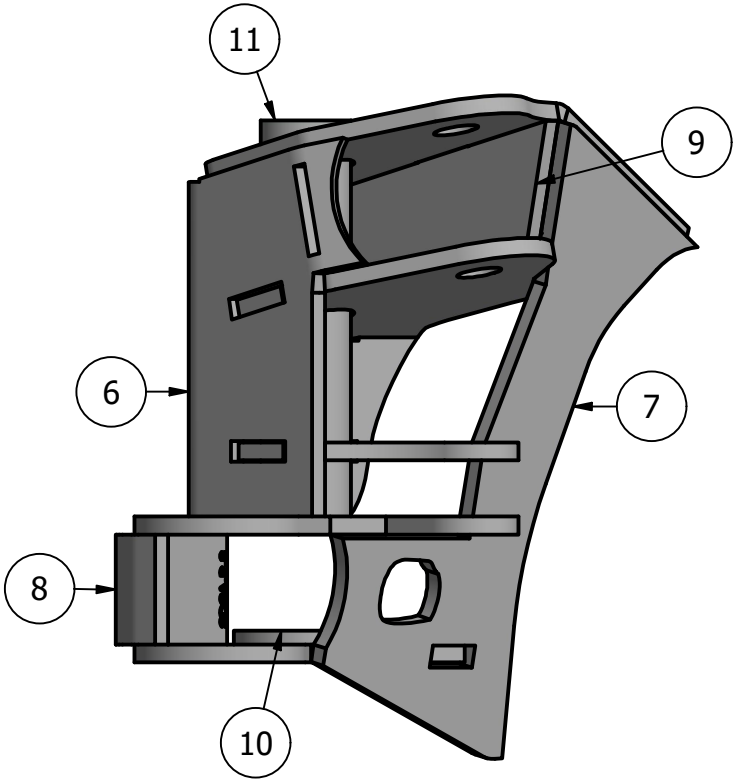

PASSENGER STEERING ARM (SDSA.P) EXPLODED VIEW

SDSA.P PART LIST		
ITEM	QTY	PART NUMBER
1	1	SDSA.P.1
2	1	SDSA.P.2
3	1	SDSA.P.3
4	1	SDSA.P.4
5	1	SDSA.P.5
6	1	SDSA.P.6
7	1	SDSA.P.7
8	1	SDSA.P.8
9	1	SDSA.P.9
88	1	SDSA.P.10
11	1	SDSA.P.11
10	1	SDSA.P.10

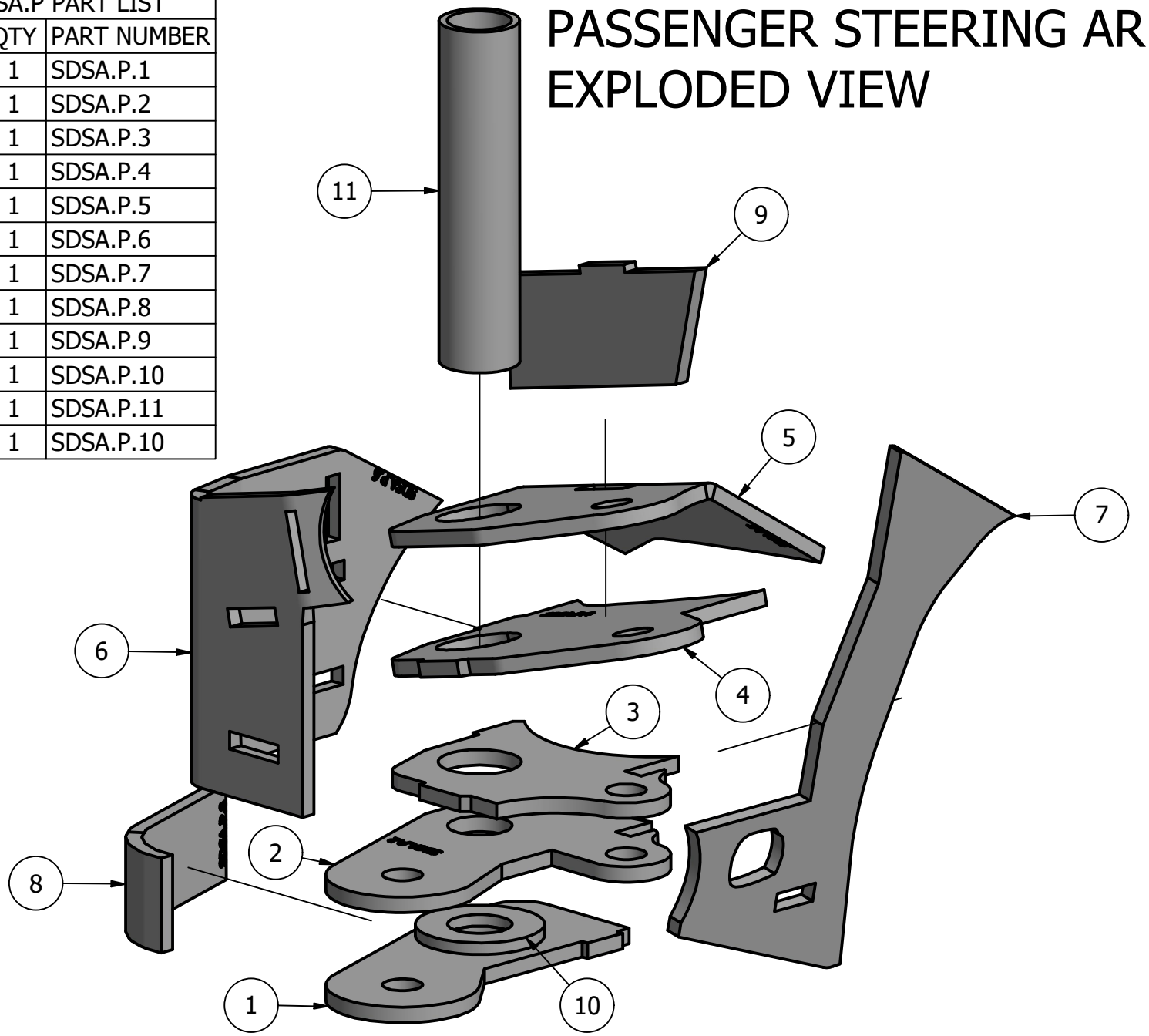

PASSENGER STEERING ARM (SDSA.P)

SDSA.P HARDWARE LIST		
ITEM	QTY	DESCRIPTION
A	1	1 X 9 BOLT
B	1	1 SAE WASHER
C	1	1 NUT
D	2	5/8 X 3.5 BOLT
E	4	5/8 SAE WASHER
F	2	5/8 NUT
G	2	1.5 MISALIGNMENT SPACER
H	2	1.75 MISALIGNMENT SPACER

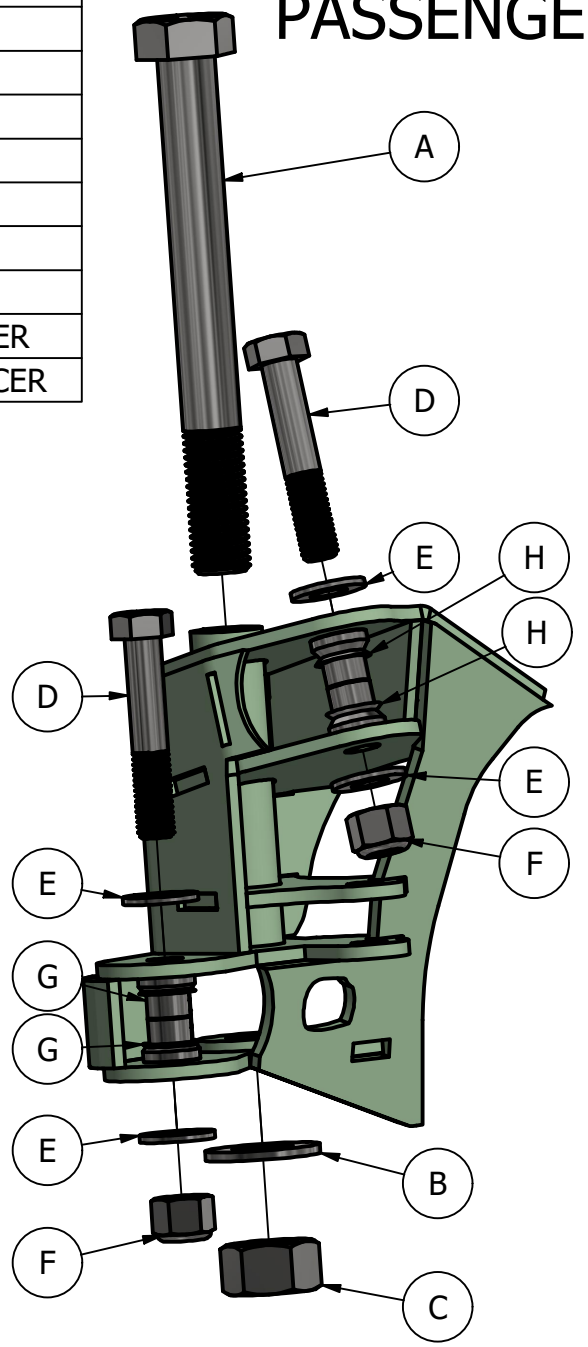

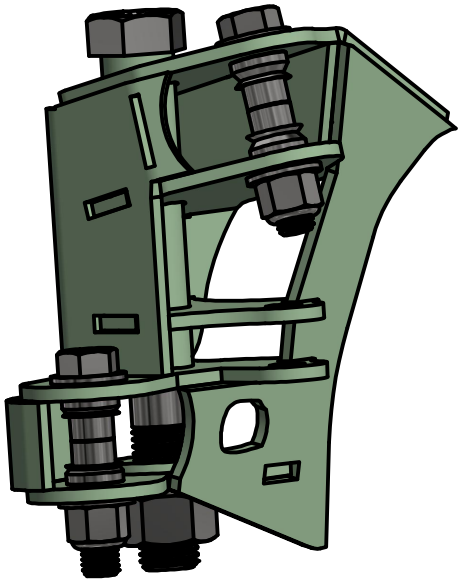

SDSA.D PART LIST		
ITEM	QTY	PART NUMBER
1	1	SDSA.D.1
2	1	SDSA.D.2
3	1	SDSA.D.3
4	1	SDSA.D.4

DRIVER STEERING ARM (SDSA.D)

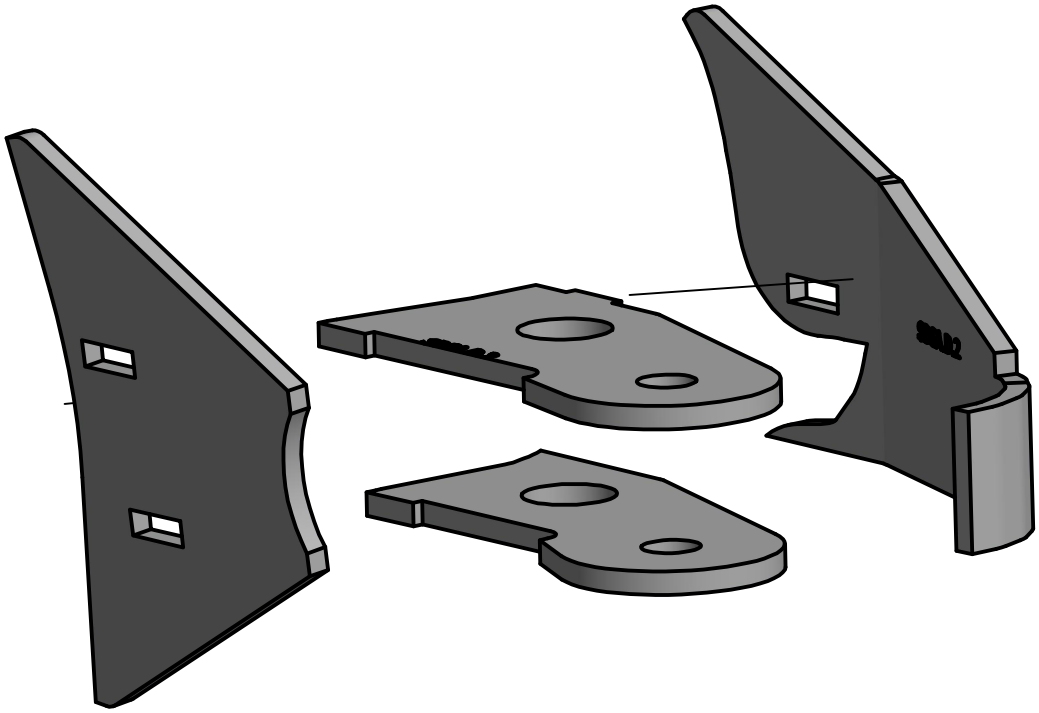

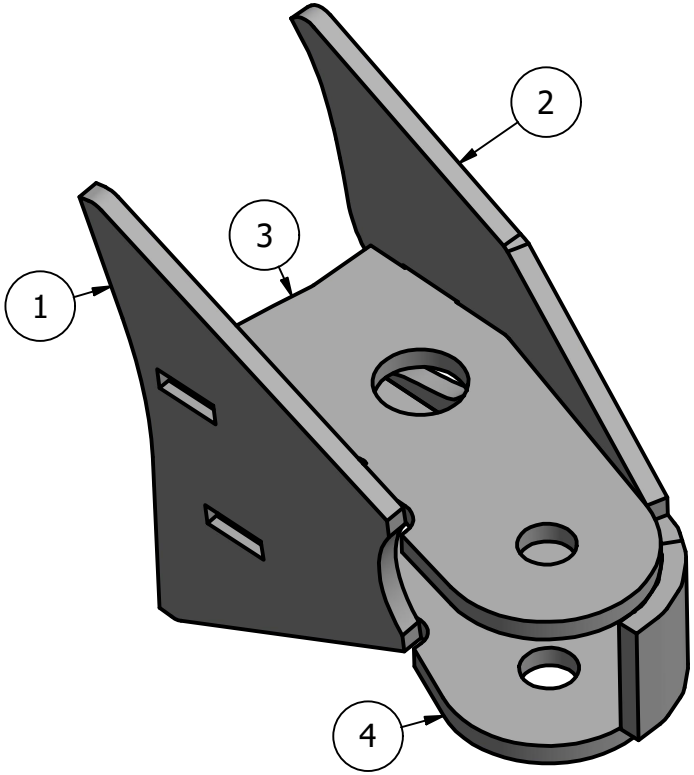

DRIVER STEERING ARM (SDSA.D)

SDSA.D HARDWARE LIST		
ITEM	QTY	DESCRIPTION
A	1	5/8 X 3.25 BOLT
B	2	5/8 SAE WASHER
C	1	5/8 NUT
D	1	1 X 3.5 BOLT
E	2	1 SAE WASHER
F	1	1 NUT
G	2	1.5 MISALIGNMENT SPACER

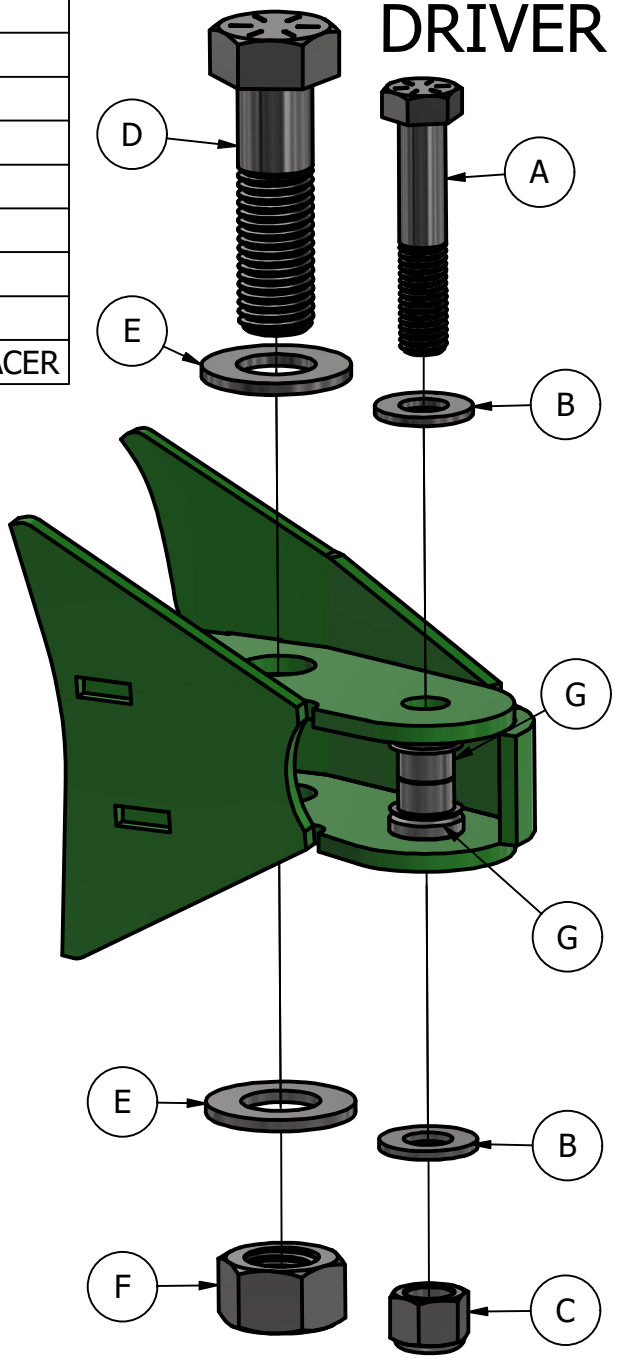

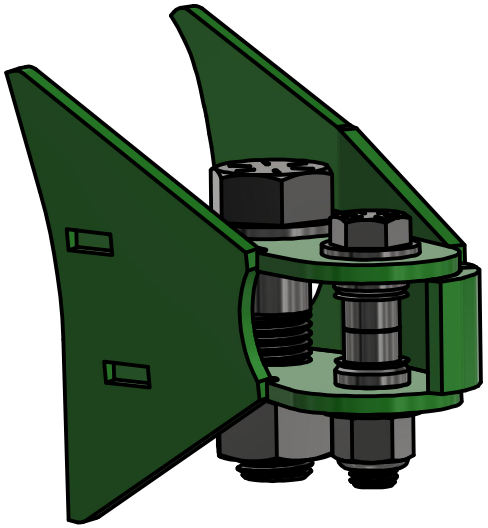

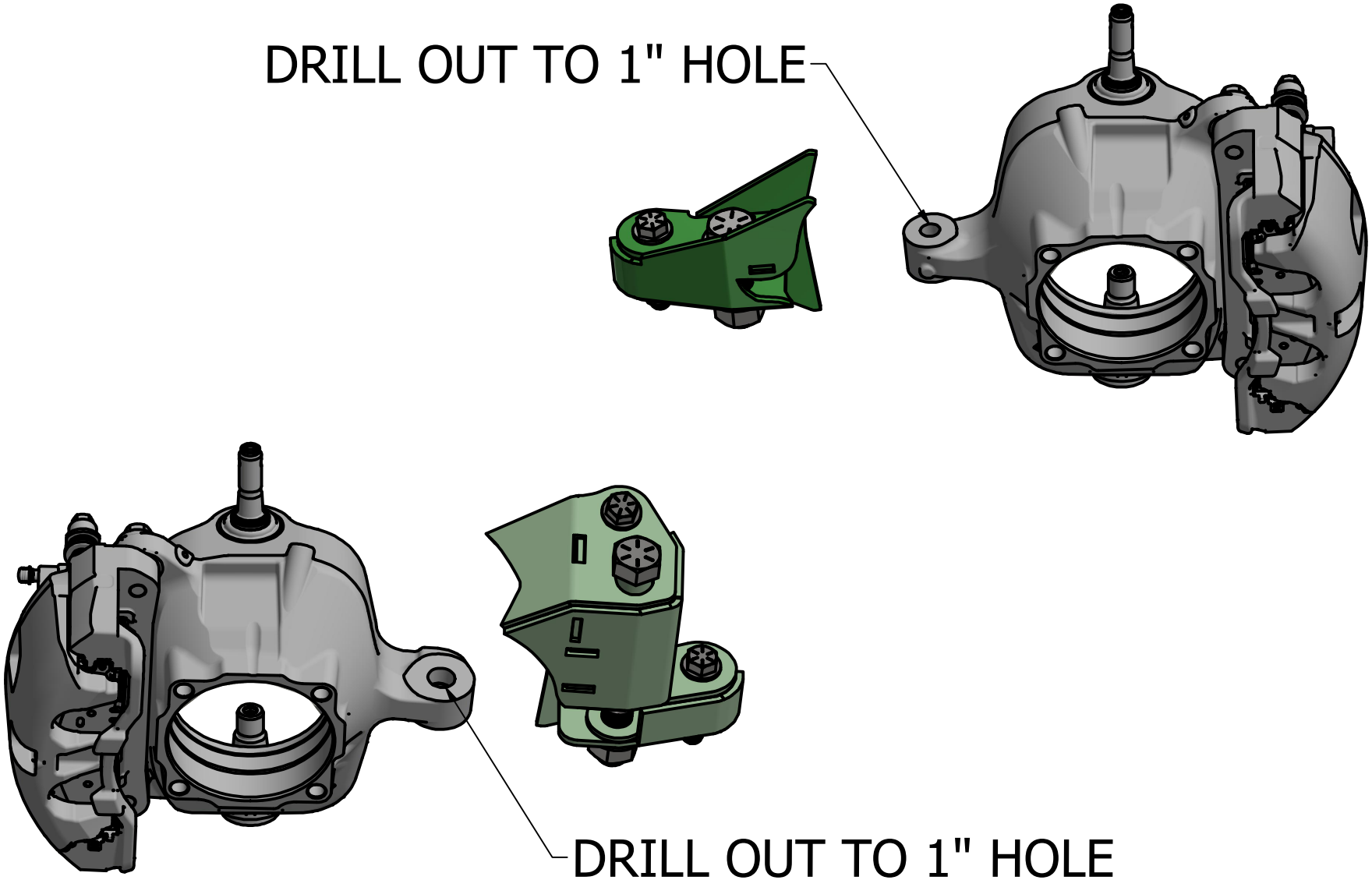
DRILL OUT TO 1" HOLE
DRILL OUT TO 1" HOLE

SDRG PART LIST		
ITEM	QTY	PART NUMBER
1	1	SDRG.1
2	2	SDRG.2
3	5	SDRG.3
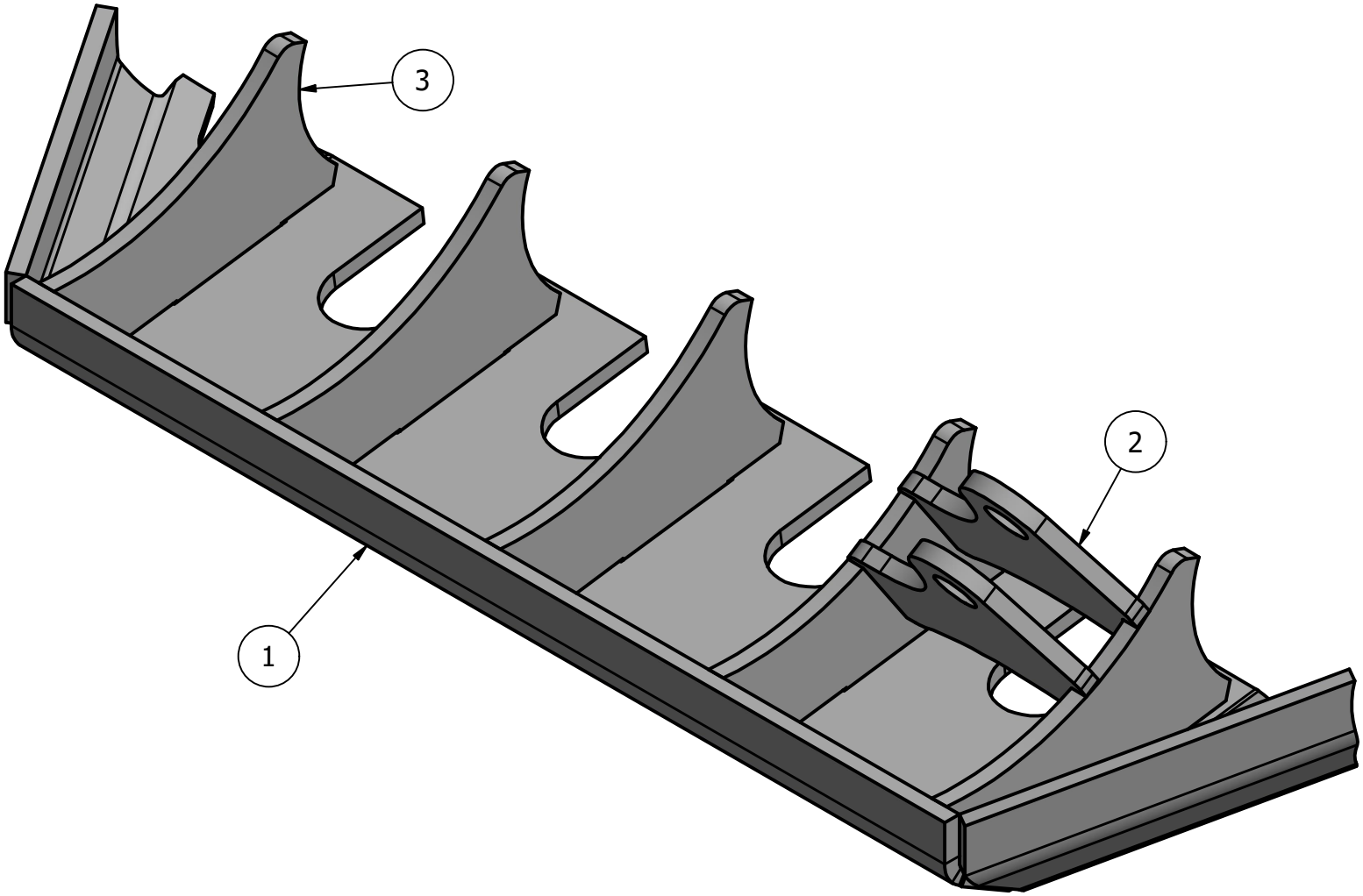
HYDRO ASSIST RAM GUARD (SDRG)